ECN/EQN/ERN 1000 Series

- **Rotary encoders with mounted stator coupling**
- **Compact dimensions**
- **Blind hollow shaft Ø 6 mm**

ECN/EQN

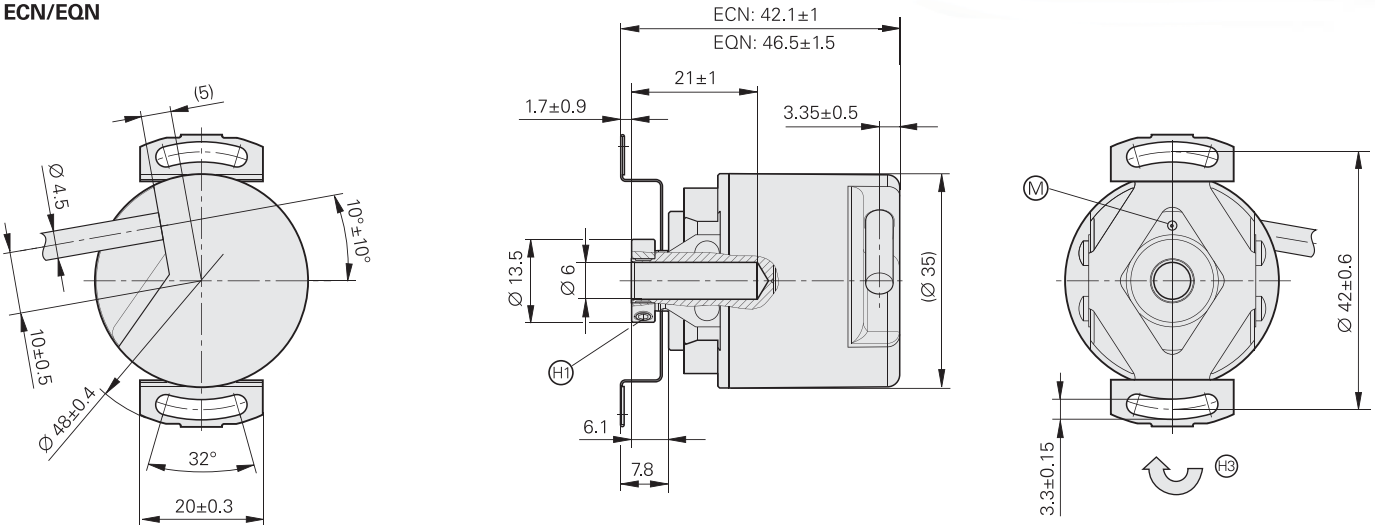

ERN

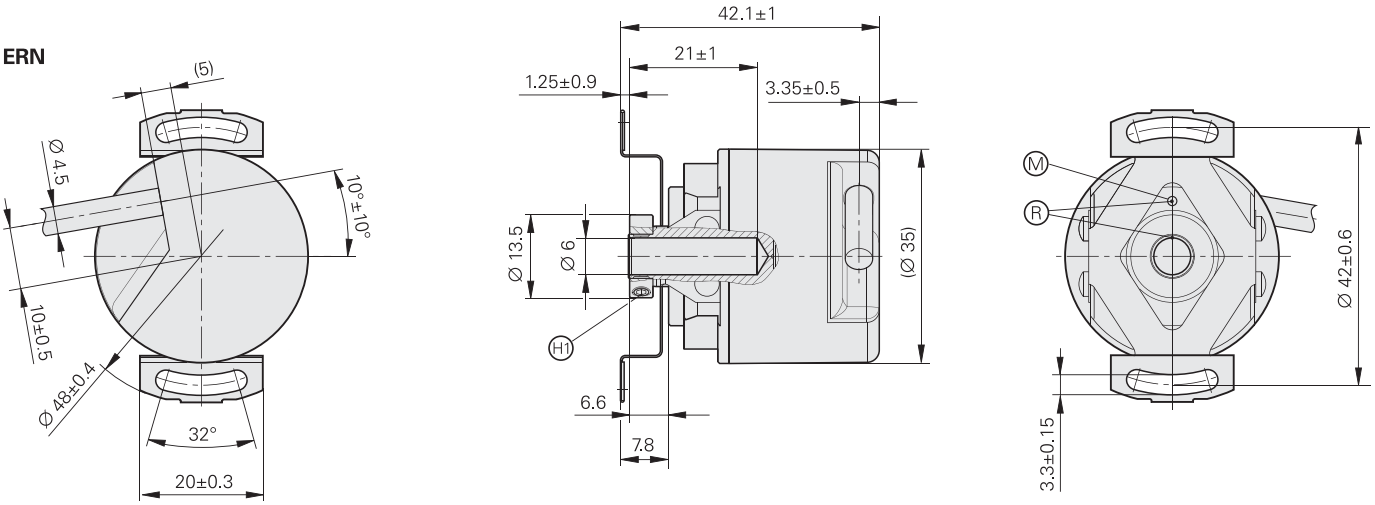

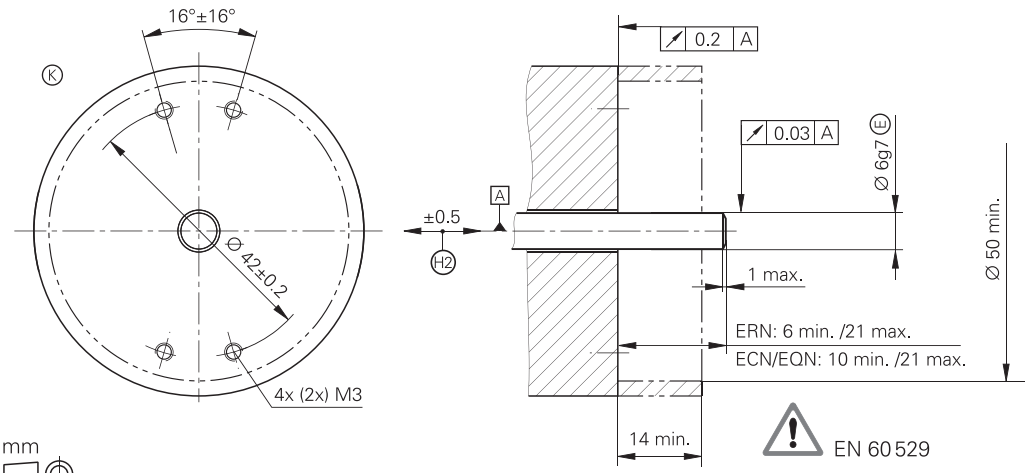

mm

Tolerancing ISO 8015
ISO 2768 - m H
< 6 mm: ±0.2 mm

A = Bearing of mating shaft
K = Required mating dimensions
M = Measuring point for operating temperature
R = Reference mark position ± 20°
H1 = 2 screws in clamping ring. Tightening torque 0.6±0.1 Nm, width across flats 1.5
H2 = Compensation of mounting tolerances and thermal expansion, no dynamic motion
H3 = Direction of shaft rotation for output signals as per the interface description

	Incremental				
	ERN 1020	**ERN 1030**	**ERN 1080**	**ERN 1070**	
Incremental signals	⊓⊔TTL	⊓⊔HTLs	∿ 1 V_{PP}[1]	⊓⊔TTL	
Line counts*	100 200 **250** 360 400 **500** 720 900 **1000** **1024** 1250 1500 2000 **2048** **2500** **3600**			**1000** **2500** **3600**	
Reference mark	One				
Integrated interpolation*	–			5-fold	10-fold
Cutoff frequency –3 dB Scanning frequency Edge separation a	– ≤ 300 kHz ≥ 0.39 µs	– ≤ 160 kHz ≥ 0.76 µs	≥ 180 kHz – –	– ≤ 100 kHz ≥ 0.47 µs	– ≤ 100 kHz ≥ 0.22 µs
System accuracy	1/20 of grating period				
Power supply **Current consumption** without load	5 V DC ± 10 % ≤ 120 mA	10 to 30 V DC ≤ 150 mA	5 V DC ± 10 % ≤ 120 mA	5 V DC ± 5 % ≤ 155 mA	
Electrical connection*	**Cable 1 m**/5 m, with or **without coupling** M23			**Cable 5 m without** M23 **coupling**	
Shaft	Blind hollow shaft D = 6 mm				
Mech. permissible speed n	≤ 12000 min^{-1}				
Starting torque	≤ 0.001 Nm (at 20 °C)				
Moment of inertia of rotor	≤ 0.5 · 10^{-6} kgm^2				
Permissible axial motion of measured shaft	± 0.5 mm				
Vibration 55 Hz to 2000 Hz **Shock** 6 ms	≤ 100 m/s^2 (EN 60068-2-6) ≤ 1000 m/s^2 (EN 60068-2-27)				
Max. operating temp.[2]	100 °C	70 °C	100 °C	70 °C	
Min. operating temp.	*For fixed cable:* –30 °C *Moving cable:* –10 °C				
Protection EN 60529	IP 64				
Weight	Approx. 0.1 kg				

Bold: These preferred versions are available on short notice
* Please select when ordering
1) Restricted tolerances: Signal amplitude: 0.8 to 1.2 V_{PP}
2) For the correlation between the operating temperature and the shaft speed or supply voltage, see *General Mechanical Information*

	**Absolute** **Singleturn** **ECN 1023**	**ECN 1013**
Absolute position values	**EnDat 2.2**	
Ordering designation	EnDat 22	EnDat 01
Positions per revolution	8388608 (23 bits)	8192 (13 bits)
Revolutions	–	
Code	Pure binary	
Elec. permissible speed Deviations[1]	12000 min^{-1} (for continuous position value)	4000 min^{-1}/12000 min^{-1} ± 1 LSB/± 16 LSB
Calculation time t_{cal}	≤ 7 µs	≤ 9 µs
Incremental signals	–	∿ 1 V_{PP}[2]
Line count	–	512
Cutoff frequency –3 dB	–	≥ 190 kHz
System accuracy	± 60"	
Power supply	3.6 V to 14 V DC	
Power consumption (maximum)	*3.6 V:* ≤ 600 mW *14 V:* ≤ 700 mW	
Current consumption (typical; without load)	*5 V:* 85 mA	
Electrical connection	Cable 1 m, with M12 coupling	Cable 1 m, with M23 coupling
Shaft	Blind hollow shaft Ø 6 mm	
Mech. permissible speed n	12000 min^{-1}	
Starting torque	≤ 0.001 Nm (at 20 °C)	
Moment of inertia of rotor	Approx. $0.5 \cdot 10^{-6}$ kgm^2	
Permissible axial motion of measured shaft	± 0.5 mm	
Vibration 55 Hz to 2000 Hz **Shock** 6 ms	≤ 100 m/s^2 (EN 60068-2-6) ≤ 1000 m/s^2 (EN 60068-2-27)	
Max. operating temp.	100 °C	
Min. operating temp.	*For fixed cable:* –30 °C *Moving cable:* –10 °C	
Protection EN 60529	IP 64	
Weight	Approx. 0.1 kg	

[1] Velocity-dependent deviations between the absolute and incremental signals
[2] Restricted tolerances: Signal amplitude 0.80 to 1.2 V_{PP}

	Multiturn	
	EQN 1035	**EQN 1025**
	EnDat 22	EnDat 01
	8388608 (23 bits)	8192 (13 bits)
	4096 (12 bits)	
	12000 min^{-1} (for continuous position value)	4000 min^{-1}/12000 min^{-1} ± 1 LSB/± 16 LSB
	≤ 7 µs	≤ 9 µs
	–	∿ 1 V_{PP}[2)]
	–	512
	–	≥ 190 kHz
	3.6 V: ≤ 700 mW *14 V:* ≤ 800 mW	
	5 V: 105 mA	
	Cable 1 m, with M12 coupling	Cable 1 m, with M23 coupling
	≤ 0.002 Nm (at 20 °C)	

Representante oficial de:

[Argentina – Bolivia – Chile – Colombia - Costa Rica – Ecuador - El Salvador – Guatemala – Honduras – Nicaragua – Panamá – Paraguay – Perú - República Dominicana – Uruguay – Venezuela.]

Calle 49 Nº 5764 - Villa Ballester (B1653AOX) - Prov. de Buenos Aires - ARGENTINA
Tel: (+54 11) 4768-4242 / Fax: (+54 11) 4849-1212
Mail: ventas@nakase.com.ar / Web: www.nakase.com.ar